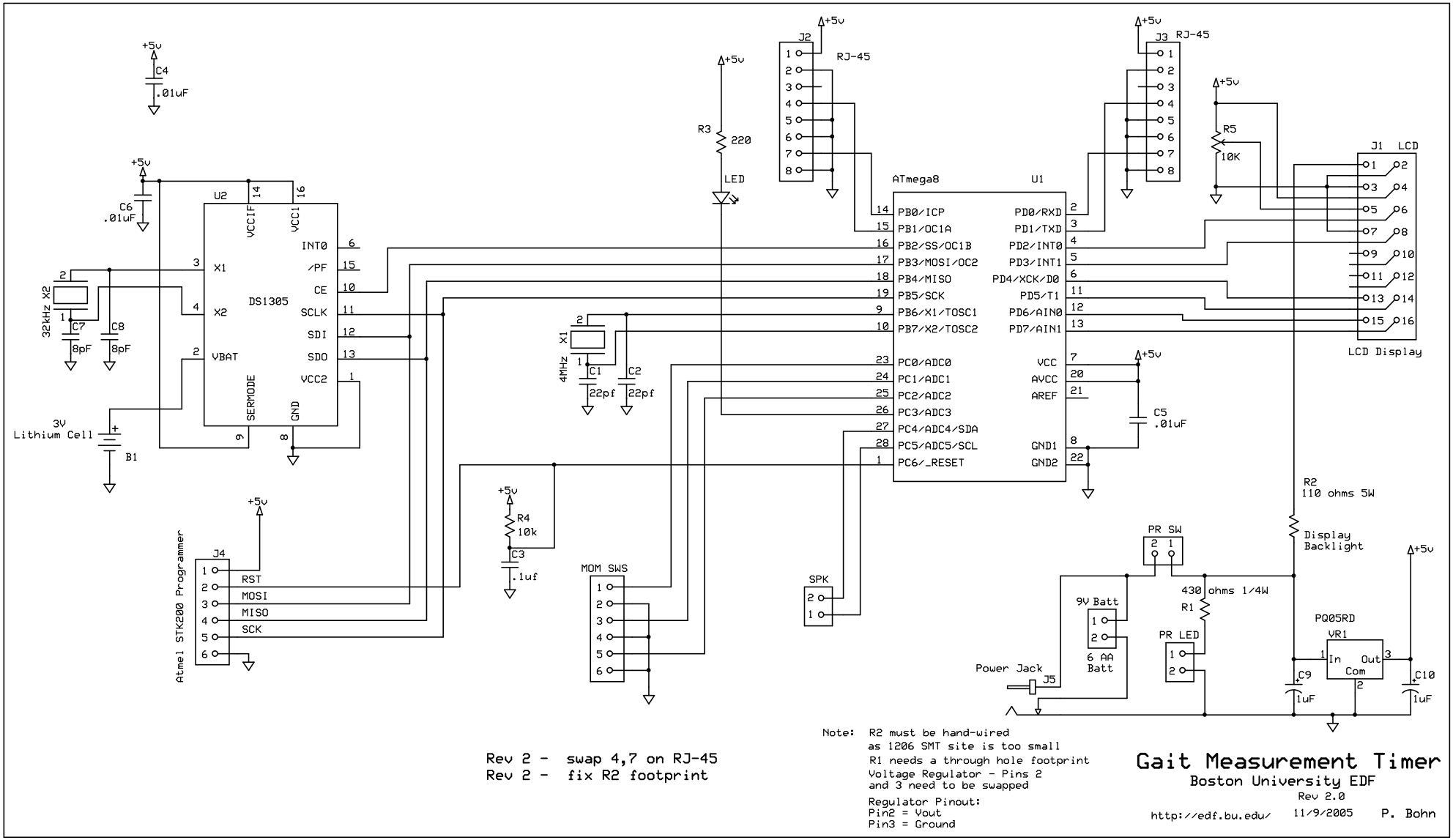

Note: R2 must be hand-wired
as 1206 SMT site is too small
R1 needs a through hole footprint
Voltage Regulator - Pins 2
and 3 need to be swapped

Regulator Pinout:
Pin2 = Vout
Pin3 = Ground

Rev 2 - swap 4,7 on RJ-45
Rev 2 - fix R2 footprint

Gait Measurement Timer

Boston University EDF

Rev 2.0

http://edf.bu.edu/ 11/9/2005 P. Bohn